CINTSA EAST WASTEWATER TREATMENT WORKS

GENERAL LAYOUT

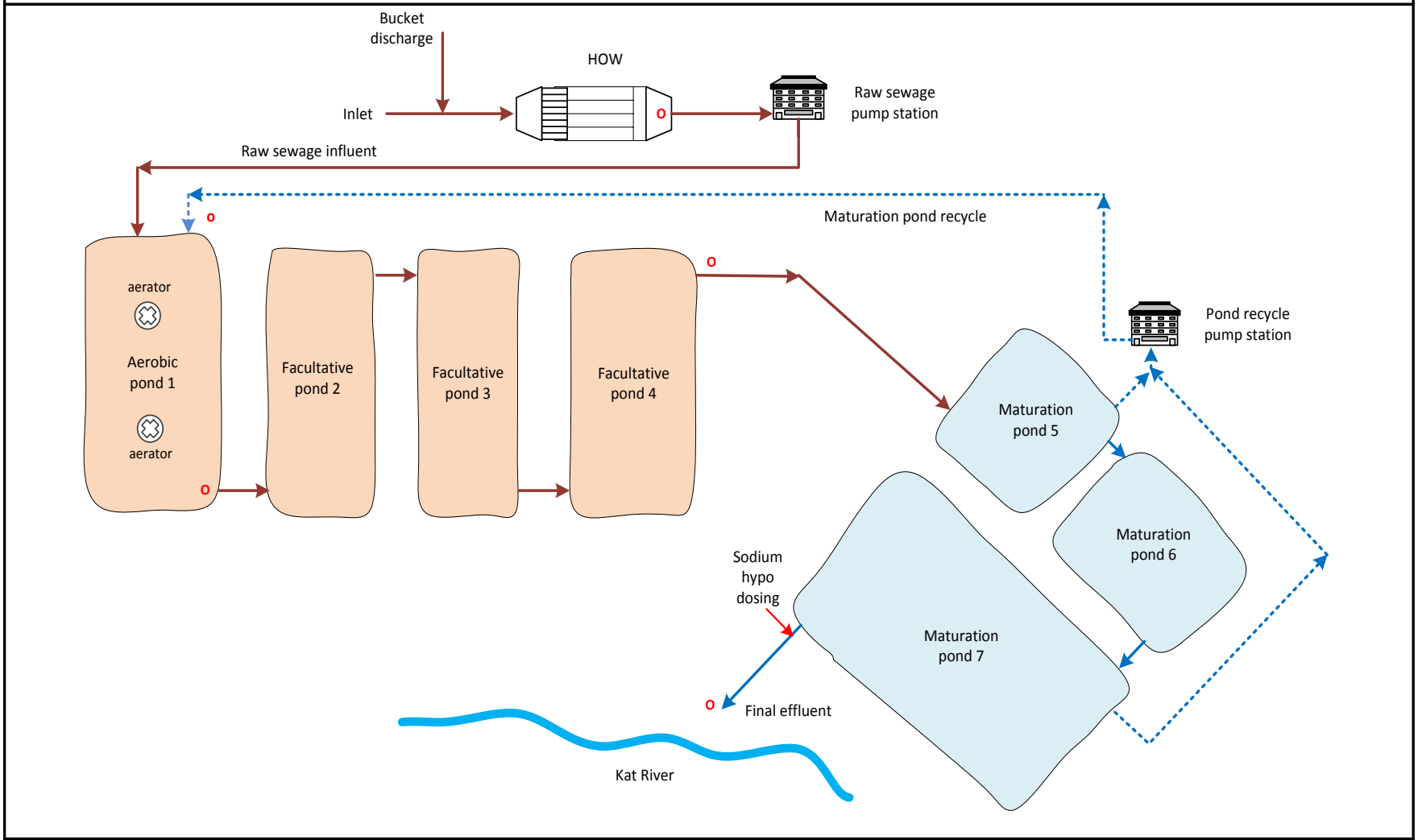

Raw sewage

Recycle

o Sampling points

Final effluent

Co-ordinates:
32˚ 48' 54.74" S
28 ˚ 06' 09.24" E
Elevation: 60 m

FORT BEAUFORT WASTEWATER TREATMENT WORKS

GENERAL LAYOUT

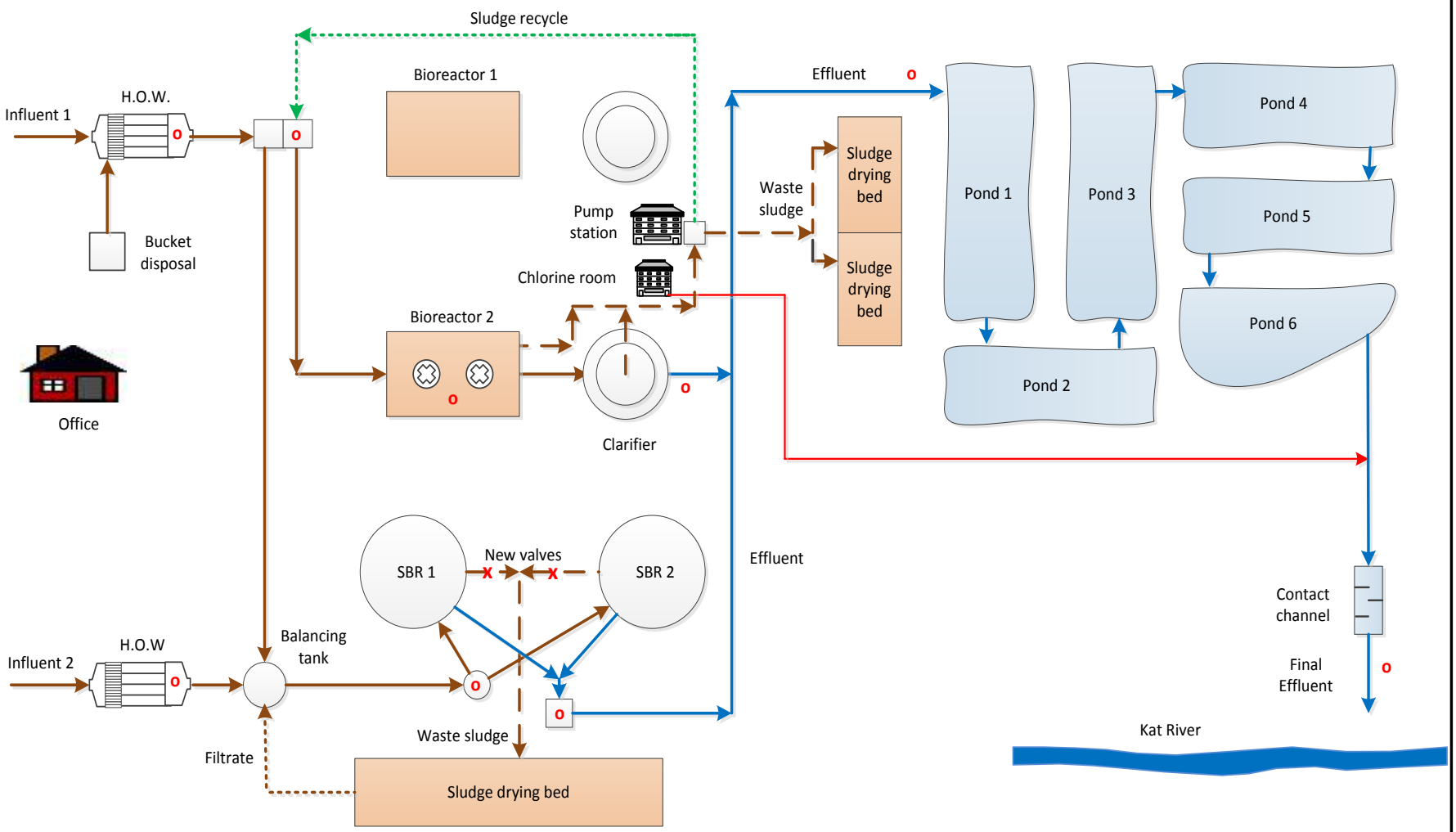

Raw sewage

Waste activated sludge

Sludge filtrate

Return activated sludge

Final effluent

Chlorine dosing

Co-ordinates:
32˚ 47' 03.88" S
26˚ 38' 52.75" E
Elevation: 423 m

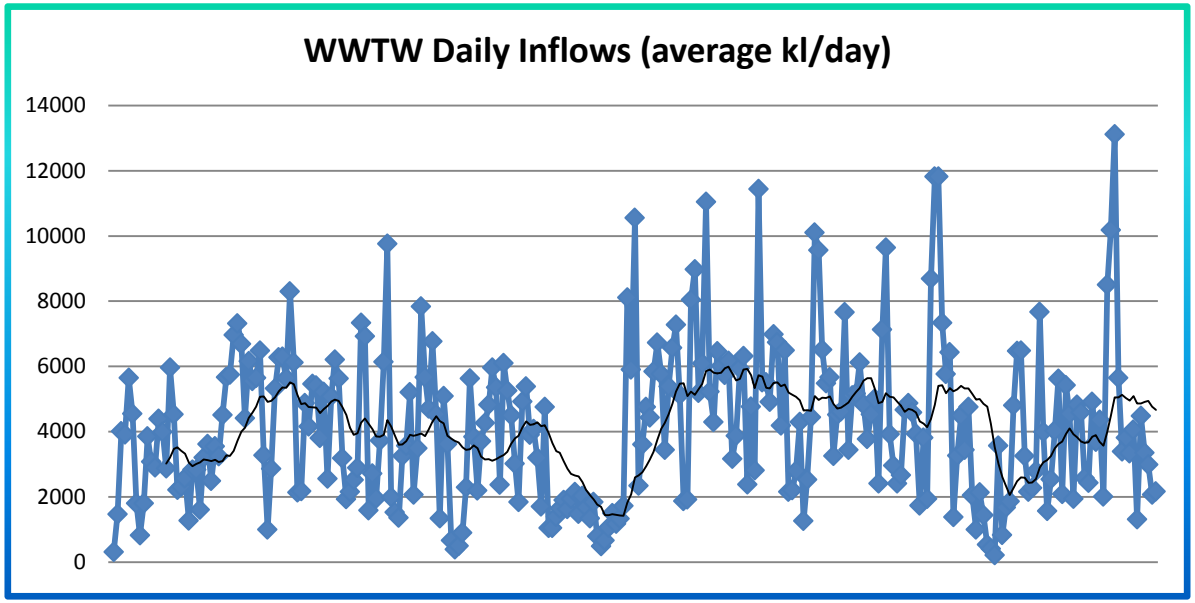
WWTW Daily Inflows (average kl/day)
14000
12000
10000
8000
6000
4000
2000
0

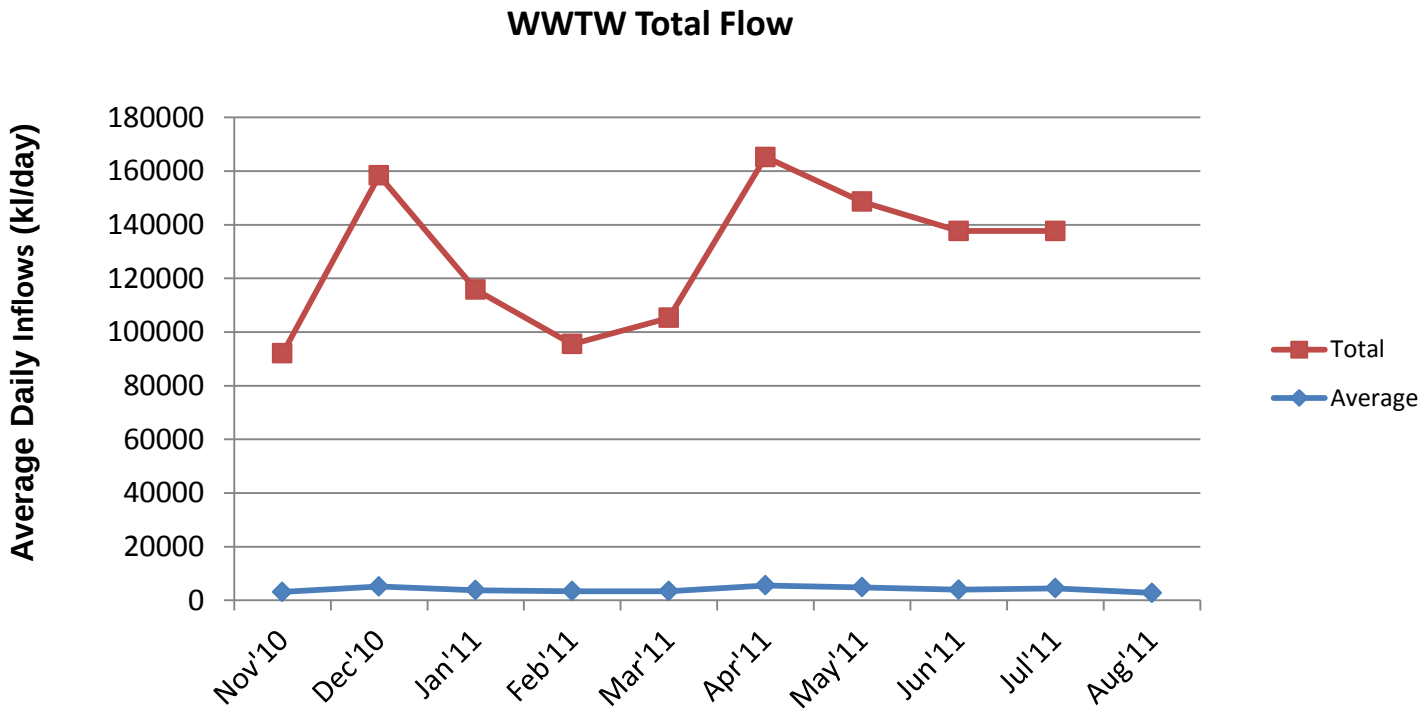
WWTW Total Flow
Average Daily Inflows (kl/day)
180000
160000
140000
120000
100000
80000
60000
40000
20000
0
Nov'10
Dec'10
Jan'11
Feb'11
Mar'11
Apr'11
May'11
Jun'11
Jul'11
Aug'11
Total
Average

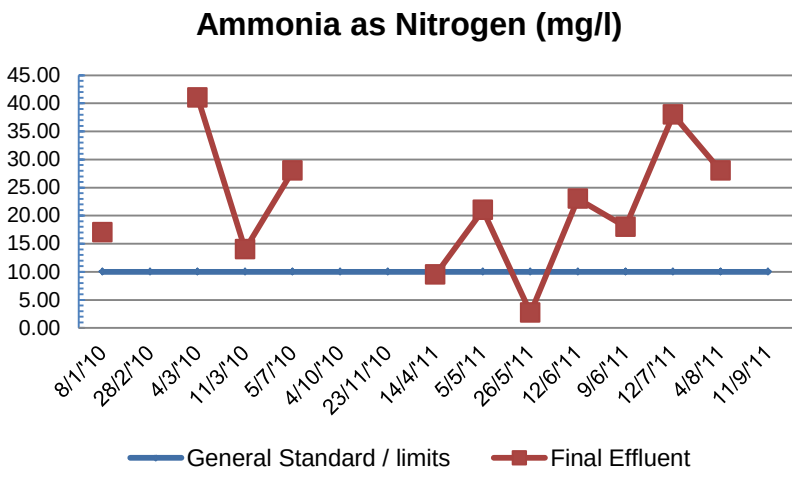

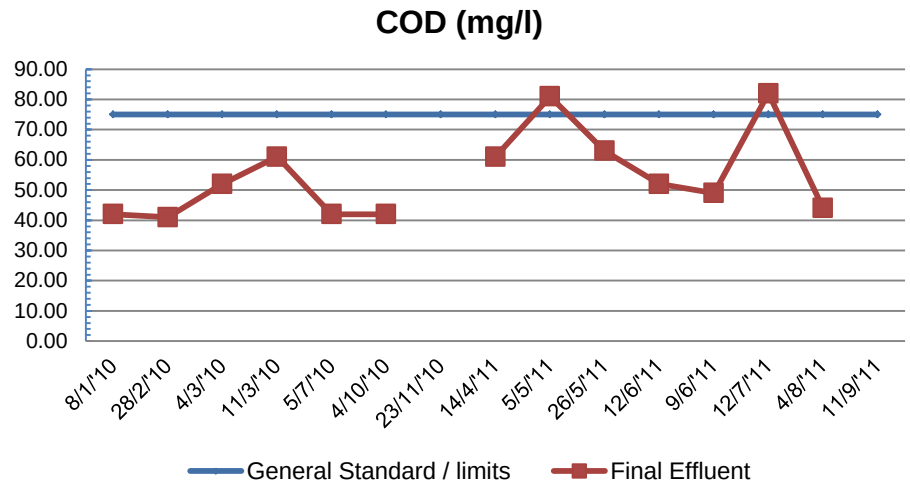

Parameter	Design		Actual (@Sept'11)
	SBR	*ASP*	
Flow (Ml/d)	1.3	1.4-1.68	4.0
COD (mg/l)	1000	950	175-1420*
COD load (kg/d)	1300	1632	700-5680*
TP (mg/l)	50	-	25
TN (mg/l)	5	-	30

Parameter	Operational specification		Process Efficiency	
	SBR	*ASP*	*SBR*	*ASP*
SRT (days)	36	20	ND	ND
MLSS (mg/l)	3500	5260	256	520
RAS (% of influent)	NA	25-75	ND	ND
DO (mg/l)	1.8	2.0	ND (4.0)	ND (7.0)
SVI	80-120	80-120	17	96

Parameter	Limit	Actual (Sept'11)	% compliance (Jan – Sept ;11)
COD	75	69	86
SS	25	32	33
NH3-N	10	30	17
O-PO4	10	3.5	100
F .oliform	1000	>2420	40
Res Cl_2	0.25	NM	0
pH	5.5-9.5	7.3	100

Section 2.

METHODOLOGY IN DEVELOPING A W_2RAP

1. Assemble a multi-disciplinary team
2. Document & describe the system
3. Assess the existing or proposed system (includes process description & flow diagram)
4. Hazard assessment & risk determination
5. Identify hazards, control measures & preventative actions
6. Monitoring of control measures and wastewater quality
7. Verification that W_2RAP is effective and meet health & environmental based targets
8. Management procedures & support programmes
9. Documentation and communication procedures
10. Review of the W_2RAP

Critical control points

Validation

Section 3.

CHECKLIST FOR CONDUCTING A W_2RAP

Risk Rating Methodology (1):

Two risk rating methodologies can be used:

i) The Cumulative Risk Rating (CRR) presents a yardstick used by the Regulator to track and report progress based on four critical criteria which indicate the operational risk pertaining to the wastewater treatment plant:

CRR = A*B+C+D

where:

- *Design Capacity of the plant (as Average Dry Weather Flow)*
- *Actual (operational) flow received at plant*
- *Number of non-compliant effluent quality constituents discharged*
- *Number of non-compliance parameters in terms of Technical Skills requirements (Regulation 2834).*

Risk Category (as CRR/CRR_{max})*		Number of plants in risk category	Plant specification per risk category	Key risk element to be addressed
Low risk	<50% CRR	0	0	-
Moderate risk	50-<70% CRR	3	Plant C Plant Z Plant Y	A-Lack design specification B,C-Lack monitoring data C-Final effluent quality
High risk	70-<90% CRR	1	Plant E	B-Exceed design capacity C-Final effluent quality
Critical Risk	90-100% CRR	1	Plant B	A, B, C and D

WWTW Name	PAT 2012 CRR	Maximun CRR_{max}	Minimum CRR_{min}	% CRR/CRR_{max}	Risk	TARGET % CRR/CRR_{max}
Plant E	15	17	4	88%	High	<30%
Plant B	17	17	4	100%	Critical	<50%
Plant C, Z, Y	9	18	4	50%	Moderate	<20%

Risk Rating Methodology (2):

ii) A hazard assessment matrix can be used to score exiting risks with regard to the reticulation, pumpstations and treatment system as follows**:**

Risk Rating = Likelihood X Consequence (x Urgency)

LIKELIHOOD / PROBABILITY*	RATING	CONSEQUENCE / IMPACT / SEVERITY**	RATING	TIME URGENCY**	RATING
Almost certain (once a day or permanent feature)	5	Catastrophic (Death expected from exposure – hazmat situation)	5	Immediate intervention required (< 3 month)	5
Likely (once per week)	4	Major (Population exposed to significant illness or significant Economic or Environmental Impact) – i.e. major export crop loss, river downstream seriously polluted and requiring intervention etc	4	3-12 Months	4
Moderately (once per month)	3	Moderate (moderate impact to large population - or moderate Economic or Environmental Impact)	3	1-3 years	3
Unlikely (once per year)	2	Minor (minor impact to large population or minor Economic or Environmental Impact) – i.e. replacement of a cow	2	3-5 years	2
Rare (once in 5 years)	1	Insignificant (No impact – or non serious Economic or Environmental Impact) – i.e. system can re-establish itself in a relatively short time frame	1	>5 years	1

Score		Risk Profile
0-50	**LOW**	These are systems that operate with minor deficiency and usually meet the effluent quality specifications set by DWA. It is unlikely that this level of risk is harmful to the health of people and the environment. Aesthetically and/or physical non-compliance can be expected for short periods.
55 – 100	**MODERATE**	These are systems with deficiencies which individually or combined pose a high risk to the quality of the receiving environment and health. These systems would not generally require immediate action but the deficiencies should be rectified to avoid future problems and associated cost to rectify once in HIGH risk. Aesthetically and/or physically non-compliance can be expected over a medium term. Medium term impact on infrastructure and partial failure of the wastewater treatment plant and disinfection process is likely.
105-125	**HIGH**	These are systems with deficiencies which individually or combined pose a high risk to the quality of the receiving environment and health, and may lead to potential health, safety and environmental concerns. Once a systems (or part of a system) are classified under this category, immediate corrective action is required to arrest or eliminate the deficiency. High impact on the health of people and the environment and/or significant damage to infrastructure can be expected. Total failure of the collector, treatment and disinfection facility are likely.

Drakenstein WWTW's W_2RAP Hazard Assessment

Item no	System	Hazard/Risk Description	Inherent Risk Score (before consideration of any controls)		Existing controls	Control Effectiveness (%)	Residual Risk Score		Comment	Recommended mitigation/ improvement plan
		Process Failure								
6	Domestic Pumping Station	Influent compliance	20	Medium	Operational monitoring i.e. Laboratory testing	80	4	Low	Operational monitoring is to occur to operational monitoring alert level	Ensure monitoring occurs as scheduled
		Mechanical Failure								
14	Industrial Inlet Works	Hand Raked Screens	15	Medium	Permanent Cleaning of Screen throughout the day	70	4.5	Low	Permanently posted staff clean hand raked screen	Investigate installation of mechanical screens
		Process Failure								
15	Industrial Inlet Works	Influent compliance	20	Medium	Operational monitoring i.e. Laboratory testing	80	4	Low	Operational monitoring is to occur to operational monitoring alert level	Ensure monitoring occurs as scheduled
		Process Failure								
21	Flocculator	Operational Monitoring	16	Medium	Operational Monitoring i.e. Laboratory testing	80	3.2	Low	Operational monitoring to occur to alert levels with corrective actions as per Alert Level	Ensure Monitoring occurs as scheduled and incident management protocol is followed
		Structural Failure								
23	Domestic splitter box	Tower	15	Medium	Construction of new tower	0	15	Medium	Construction of a new tower must be investigated	Investigate structure of tower
		Process Failure								
26	Domestic PST's	Operational Monitoring	16	Medium	Operational Monitoring i.e. Laboratory testing	80	3.2	Low	Operational monitoring needed with Actions as per Alert Level	Follow Alert Level actions
		Structural Failure								
29	Biofilters Splitter Tower	Tower	25	High	Tower to be replaced as part of upgrading	100	0	None	The existing tower will be replaced during upgrading of WWTW	Inspection of new Tower once a year
		Structural Failure								
31	Biofilters	Old Biofilter walls	25	High	Structure strapping	25	18.75	Medium	currently strapping is used to reinforce broken brickwork outer walls	Refurbish walls as part of future upgrade